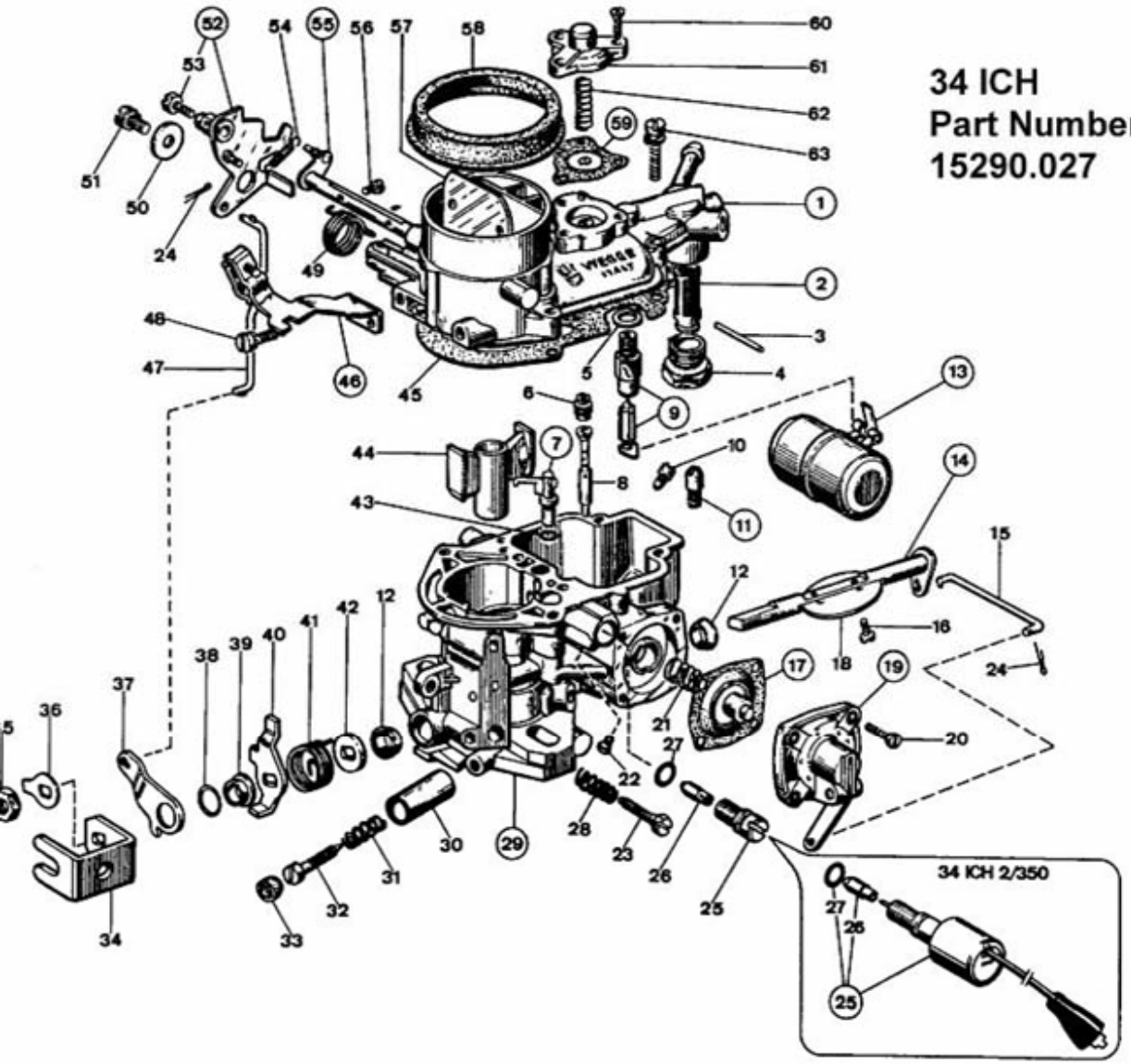

PARTS LIST

TYPE 34 ICH – PART NO. 15290.027

34 ICH
Part Number
15290.027

Dia No.	Qty. Req'd	Description	Part Number		Dia No.	Qty. Req'd	Description	Part Number
1	1	Carburetor Top Cover	31706.080		32	1	Carb Adjusting Screw	64750.048
2	1	Fuel Filter Screen	37022.010		33	1	Plug	Not Serviced
3	1	Float Pin	52000.010		34	1	Throttle Valve Control Lever	45136.029
4	1	Strainer Inspection Plug	61002.018		35	1	Throttle Shaft Fixing Nut	34715.014
5	1	Needle Valve Gasket	83102.070		36	1	Shaft Lock Tab	55520.002
6	1	Air Corrector Jet	77201.*		37	1	Fast Idle Control Lever	45032.075
7	1	Pump Jet	76407.*		38	1	Wavy Washer	55530.002
8	1	Emulsion Tube	61440.*		39	1	Bushing	12775.007
9	1	Needle & Seat	79507.*		40	1	Lever	Not Serviced
10	1	Main Jet	73801.*		41	1	Spring For Choke Lever	47610.058
11	1	Pump Valve	79701.*		42	1	Shaft Spacer	55555.016
12	2	Bushing	41575.010		43	1	O-Ring	41565.001
13	1	Float	41015.011		44	1	Auxiliary Venturi	70519.450
14	1	Throttle Shaft	10015.494		45	1	Top Cover Gasket	41700.010
15	1	Pump Control Rod	61280.020		46	1	Choke Cable Bracket	58702.023
16	2	Throttle Plate Fixing Screw	64520.023		47	1	Fast Idle Control Rod	61280.021
17	1	Accelerator Pump Diaphragm	47407.261		48	1	Lever Fixing Screw	64700.012
18	1	Throttle Plate	64005.007		49	1	Spring	47610.003
19	1	Pump Cover	Not Serviced		50	1	Washer	55510.002
20	4	Screw	64565.001		51	1	Lever Fixing Screw	64700.012
21	1	Accelerator Pump Spring	47600.107		52	1	Lever	45202.125
22	1	Plug	Not Serviced		53	1	Screw	64615.004
23	1	Throttle Stop Screw	64625.012		54	1	Spring	47605.040
24	2	Split Pin	32610.005		55	1	Choke Shaft	10015.279
25a	1	Idle Jet Holder	52570.009		56	2	Choke Plate Fixing Screw	64525.003
25b	1	Idle Cut Off Solenoid	43904.050		57	1	Choke Plate	64010.026
26	1	Idle Jet	74409.*		58	1	Rubber Air Filter Adaptor	10304.022
27	1	'O' Ring For Idle Jet	41565.019		59	1	Power Valve Diaphragm	47407.250
28	1	Spring For Throttle Stop Screw	47600.007		60	3	Screw	Not Serviced
29	1	Carburetor Body	Not Serviced		61	1	Power Valve Cover	Not Serviced
30	1	Bushing	Not Serviced		62	1	Spring	47600.131
31	1	Spring For Adjusting Screw	47600.007		63	4	Top Cover Fixing Screw	64700.005

* Calibrated Parts Require 3 Digits To Complete Part Number.
See Calibrated Parts Section For Sizes